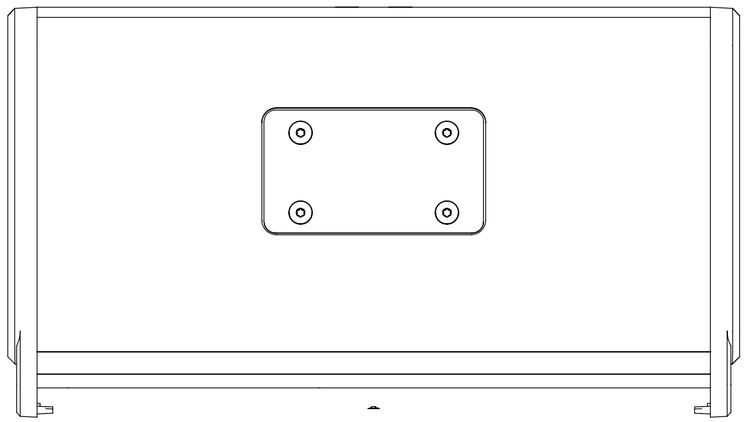

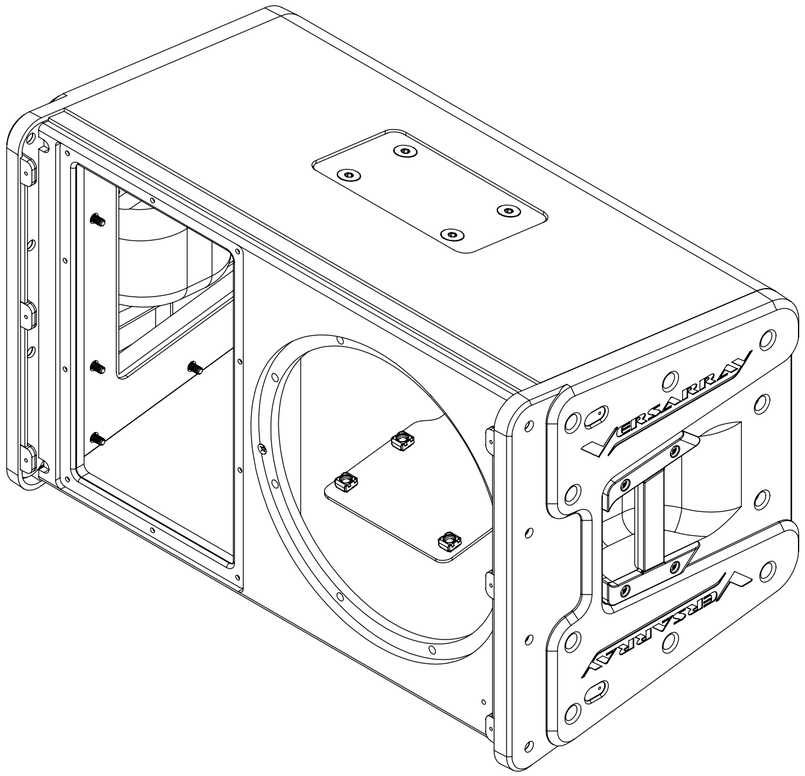

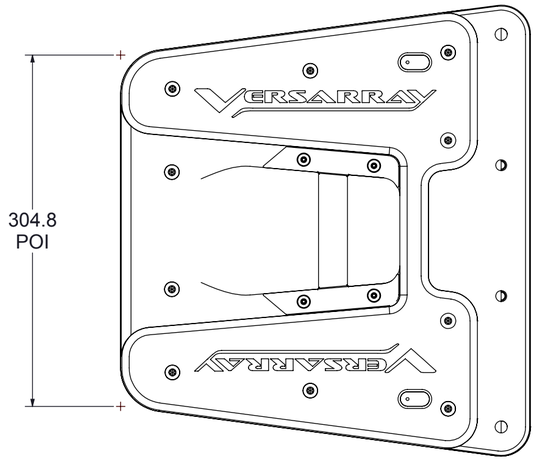

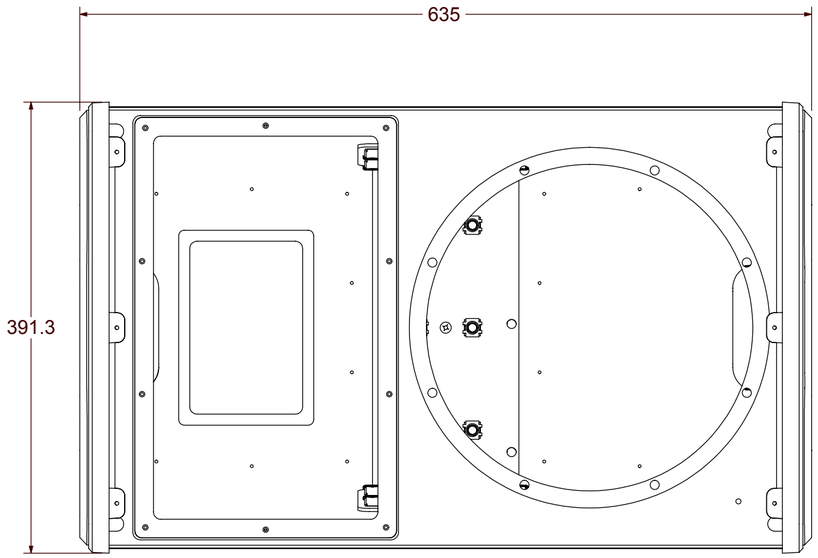

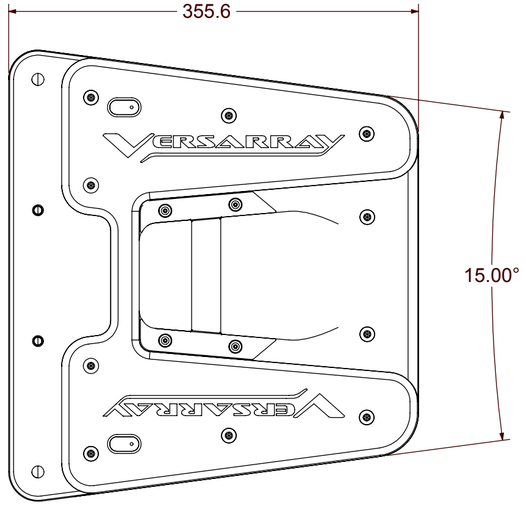

NOTE:
1. POI = POINT OF INTERSECTION

PEAVEY CONFIDENTIAL

REV	REVISION DESCRIPTION	ZONE	BY	CHK'D	ECN	DATE

DRAWN	POPE
DATE	3/13/2019
CHK'D	XXX
SCALE	1:4
MECH. ENGR.	

UNLESS OTHERWISE SPECIFIED, THE FOLLOWING APPLY:
TOLERANCES: .XX = ±0.25mm ANGLES = ±1°
MATERIAL: ,
FINISH:

PEAVEY ELECTRONICS CORP.
5022 HARTLEY PEAVEY DRIVE
MERIDIAN, MS 39305

DESC. VR 218 LINE DRAWING

DWG NO. VR 112 LINEC
SHEET 1 OF 1

REV. A